AMERICAN SPECIALTIES, INC.
441 Saw Mill River Road, Yonkers, NY 10701 (914) 476-9000

Hand Dryer

Operating Instructions and Parts Manual
Semi-Recessed High-Speed hand dryer

PLEASE CAREFULLY READ THROUGH THIS MANUAL BEFORE USING THE PRODUCT. OBSERVING ALL SAFETY INFORMATION, WARNINGS AND CAUTIONS WILL PROTECT YOURSELF AND OTHERS. PLEASE KEEP INSTRUCTIONS FOR FUTURE REFERENCE.

MODEL # 20199-1

MODEL # 20199-2

Patent Pending

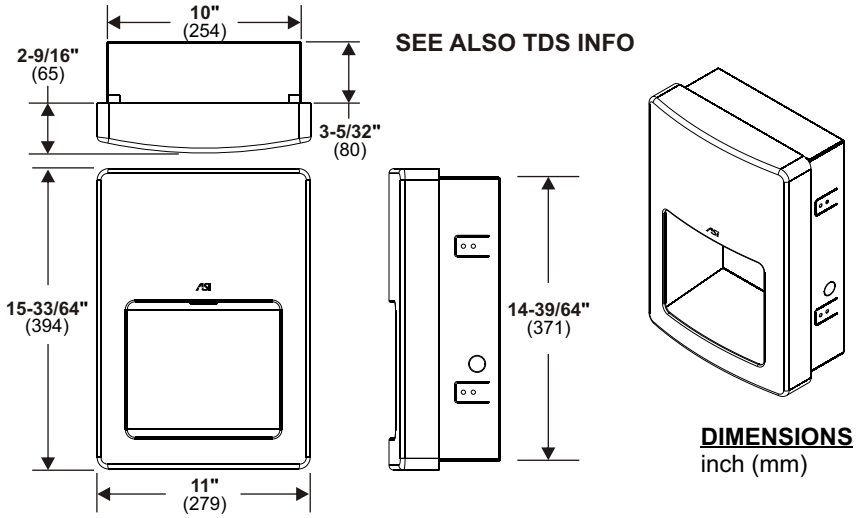

SEE ALSO TDS INFO

DIMENSIONS
inch (mm)

TECHNICAL SPECIFICATIONS

ITEM CATEGORY	PERFORMANCE DATA
Operating Voltage, 20199-1	110-120 VAC, 50/60 Hz, 0.84-1.0kW
Operating Voltage, 20199-2	220-240 VAC, 50/60 Hz, 0.84-1.0kW
Output Warm Air Volume	60 CFM {102 m³/h}
Output Warm Air Temp	131°F {55°C} at ambient T = 77°F {25°C}
Output Air Speed	201 mph (295 ft/s) 17700 ft/m [90 m/s {324 km/h}]
Sound Pressure	66 dB-A @ 2m
Motor Type	0.67 HP, 29 krpm, Brush Type, Dual Ball Bearings
Motor Thermal Protection	Auto Resetting Thermostat turns unit off at 203°F {95°C}
Heater Element	500W Nichrome wire with auto reset circuit breaker (thermostat)
Heater Thermal Protection	Auto Resetting Thermostat turns unit off at 185°F {85°C}, Resets at 167°F {75°C}
Drying Time	Less than 15 seconds
Circuit Operation	Infrared Automatic, self adjusting
Sensor Range, 20199-1	2" to 10" {51 to 254}, Adjustable; Standard 6" {150 ± 20}
Sensor Range, 20199-2	4" to 9" {100 to 230}, Adjustable; Standard 6-11/16" {170 ± 20}
Timing Protection	60 seconds auto shut off
Timing Duration	2 seconds delayed turn off after last sensor read
Cover Type	18 gauge {.047", [1.2]} thick drawn seamless 304 series stainless steel
Cover Finish	Satin Brushed, Vertical Grain
Net Weight	14.6 lbs {6.6 kg}
Shipping Weight	18.0 lbs {8.2 kg}
Unit Size	11" W x 15-33/64" H x 5-45/64" D {279 x 394 x 145}

Input	Model	Motor			Heater		Total	
VAC	№	Vac	Inrush A(W)	Operating A (W)	Vac	Inrush / Operating A(W)	Inrush A(W)	Operating A(W)
115	20199-1	115	5.99 (689)	3.99 (459)	115	3.99 (459)	9.98 (1148)	7.89 (918)
120	20199-1	120	6.25 (750)	4.17 (500)	120	4.17 (500)	10.42 (1250)	8.33 (1000)
220	20199-2	220	2.86 (630)	1.91 (420)	220	1.91 (420)	4.68 (1050)	3.82 (840)
230	20199-2	230	2.99 (689)	2.00 (459)	230	2.00 (459)	4.99 (1148)	3.99 (918)
240	20199-2	240	3.13 (750)	2.08 (500)	240	2.08 (500)	5.21 (1250)	4.17 (1000)

RESTROOMDIRECT WWW.RESTROOMDIRECT.COM 704•937•2673 129 Oakpark Dr., Unit A, Mooresville, NC 28115

AMERICAN SPECIALTIES INC.
441 Saw Mill River Road
Yonkers, NY 10701-4913
914.476.9000 | Fax 914.476.0688

20199

General safety information

⚠ WARNING **This product is intended for installation by a qualified service person. Use AWG NO. 12 solid conductor for wiring.**

⚠ WARNING **Disconnect power at the service breaker before installing or servicing.**

⚠ DANGER **Failure to properly ground unit could result in severe electrical shock and/or death.**

⚠ WARNING **All units must be supplied with a 3-wire service. The ground wire must be connected to the dryer's backplate.**

Installation

-- NOTE: Do not install dryer over washbasin --

1. Remove front panel using security wrench included in kit and retain security screws. Place cover aside with care to protect face finish until required in Step 8.
2. Remove hand drying chamber using #2 Philips screw driver and retain screws. Place chamber aside with care to protect inside finish until required in Step 7.
3. Remove four (4) mounting screws from corners of chassis plate using #2 Philips screw driver and retain screws. Grasp motor securely and lift entire chassis slightly up & over retainer hook welded to housing back. Place chassis aside with care to protect unit until required in Step 5.
4. Install supplied plastic KO bushing (or other, not supplied) into KO to be used for cable prior to installation of cable into KO or box into RWO (Rough Wall Opening, previously prepared by others). Install wall box housing into RWO locating stub cable into any one (1) of four (4) available KO locations on sides or bottom of box. Using screws supplied with unit (or other types suitable to wall conditions, by others) tighten screws through adjustable mounting tabs into framing in side walls of RWO to center wall box in opening.
5. Grasp chassis & motor assembly retained in step 3 and slightly lift to place over retainer hook on housing back to hold unit in place while driving screws. Using #2 Philips screw driver tighten four (4) screws also retained in step 3 through holes in corners of chassis plate into threaded posts on wall box.
6. Refer to Circuit Diagram on page 4 of this Owner's Manual (1002010837, packed with unit & Installation Guide) to match correct wire to terminal block on motor chassis. Pull stub cable through bushing (previously installed, step 4) to allow clearance around hand drying chamber (to be installed next) and enough length to prep ends for terminal block insertion after routing through strain relief clamp on chassis. Clamp cable, prep endes of wires and insert correct wires into terminal block at locations L, N & G. Using a small flat blade screwdriver ensure each wire is properly secured with terminal block top lock screws.

   Connections: (see fig. 6 & refer to Circuit Diagram)

   A. Connect the live wire (colored Brown, Red or Black) to the terminal block marked "L".

   B. Connect the neutral wire (colored Black, Blue, White or Grey) or connect the second live wire (colored Red or Orange) to the terminal block marked "N".

   C. Connect the ground wire to the terminal block marked "⏚ " or to the green screw marked "⏚ ". Bare grounding (earth) wires should be sleeved with green and yellow or green tubing.

   Colors of live and neutral wires depend on voltage of supply service and requirements of Building and Electrical Code having jurisdiction.
7. Reinstall hand drying chamber retained in step 2 into wall box housing using #2 Philips screw driver and screws also retained in step 2 while being careful to not pinch cable arranged to route clear around hand chamber in step 6.
8. Fasten the front panel onto the chassis box using the two (2) security screws retained in step 1 above using the security wrench. Retain wrench for any possible service access during dryer lifetime. Turn ON breaker at service panel (by others) and test dryer operation.
9. Record the unit S/N on this Owner Manual and give this Owner's Manual, the Installation Guide and the security wrench to Owner or Facility Manager.

RESTROOMDIRECT WWW.RESTROOMDIRECT.COM 704•937•2673 129 Oakpark Dr., Unit A, Mooresville, NC 28115

AMERICAN SPECIALTIES INC.
441 Saw Mill River Road
Yonkers, NY 10701-4913
914.476.9000 | Fax 914.476.0688

20199

Installation Kit Included (find in carton)

1. Chassis Installation Screws (M5x25 Philips pan head self threading) x 4 pcs
2. Nylon Bushing x 1 pc

Service Tool Included (with installation kit)

Security hex driver 4 mm x 1 pc (5/32" pin-hex will work if tool is lost)

➢ Please unpack the unit and check the quantity of the above tool and kit.

Recommended mounting heights

- from top edge of hand chamber above finished floor (AFF)
SEE ILLUSTRATED INSTALLATION STEPS ON SHEET DOCUMENT 1002010836

Men / Women	46"	(1168)
Children 4-7 years	33"	(838)
Children 8-10 years	37"	(940)
Children 11-13 years	41"	(1041)
Children 14-16 years	45"	(1143)
Handicaped	40"	(1016)

Reference 2010 ADA Accessibility Standards

Reach LIMIT (unrestricted)	AFF (maximum)	
All Approaches	48"	(1219)

Operation

- **S**hake excess water from hands.
- **P**lace hands under the nozzle and dryer automatically starts operation.
- **R**ub hands lightly and rapidly under the nozzle.
- **D**ryer stops when hands are removed from sensor zone or if maximum time is reached.

Cleaning and Maintenance

Periodic cleaning of the unit is recommended to ensure optimum performance.

- Disconnect the electrical supply.
- Remove the two cover-mounting screws.
- Remove the cover.
- Clean all dust lint from the interior of the dryer.
- Wipe the cover with a damp cloth and mild cleaning solution. Do not Soak. Never use abrasives to clean the cover. Dry completely.
- Replace the cover. Do not over tighten the screws.

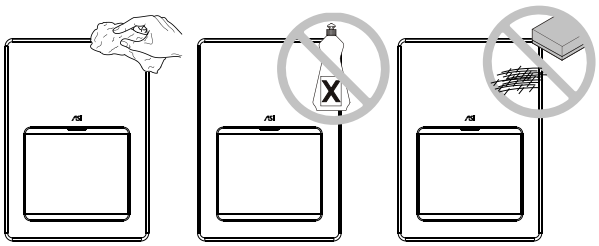

Patent Pending

Warranty

All of our dryers are designed and manufactured to provide years of dependable performance. Component parts are guaranteed to be free of defects in material and workmanship for a period of **Five (5)** years. This guarantee will be honored provided that the dryer is installed and maintained in accordance with the instructions. Parts damaged during the Installation are the purchaser's responsibility. **ASI's** warranty covers defects exclusively, and only liability for the replacement of defective parts will be accepted. This warranty does not cover wear and tear, or misuse and abuse. Transportation, freight costs and labor are also excluded. Defective parts must be returned prepaid, accompanied by the unit serial number, to the point of purchase. This warranty is granted solely to the original purchaser of the unit and is subject to registration.

RESTROOMDIRECT WWW.RESTROOMDIRECT.COM 704•937•2673 129 Oakpark Dr., Unit A, Mooresville, NC 28115

AMERICAN SPECIALTIES INC.
441 Saw Mill River Road
Yonkers, NY 10701-4913
914.476.9000 | Fax 914.476.0688

20199

Circuit Diagram

110-120~Vac

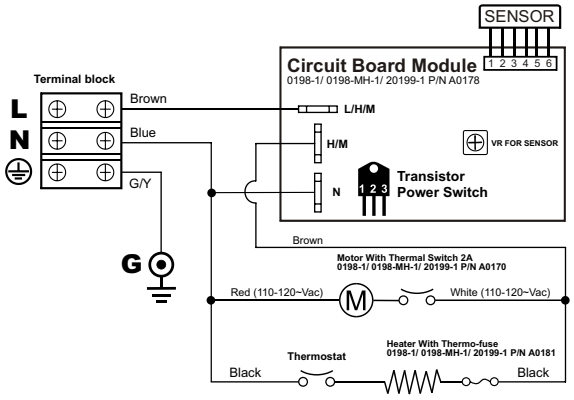

208-240~Vac

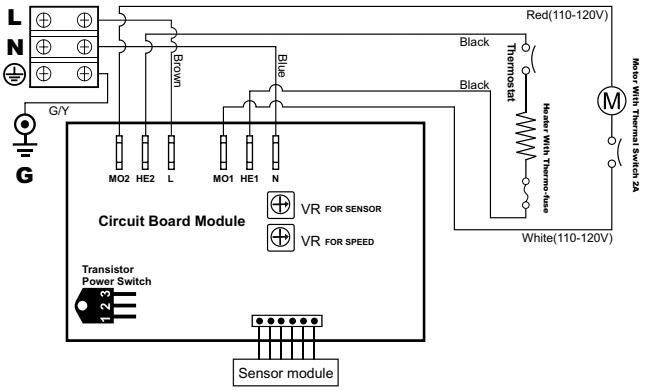

Sensor range adjustment

For 110~120V Circuit Board Module

1. The range is 2" to 10" [51 to 254],
   standard setting is 5-19/32" ± 25/32" [150 ± 20].
2. Clockwise: Increases the sensing range(+) ↻ .
3. Counterclockwise: Decreases the sensing range(-) ↺ .
4. **DO NOT OVERTURN!**

Warm air speed adjustment

For 220~240V Circuit Board Module

1. Switch off the power, loosen the cover screws and remove the cover.
2. Use small Philips head screwdriver or plastic flat blade probe to turn VR shaft. Clock-wise [CW] to increase power to maximum (+) ↻, turn tool gently [CCW] to reduce power as required(-) ↺.

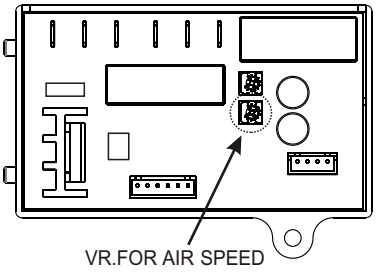

Sensor range adjustment

For 220~240V Circuit Board Module

1. The range is 4" to 9" [100 to 230],
   standard setting is 6-11/16" [170 ± 20].
2. Clockwise: Increases the sensing range(+) ↻ .
3. Counterclockwise: Decreases the sensing range(-) ↺ .
4. **DO NOT OVERTURN!**

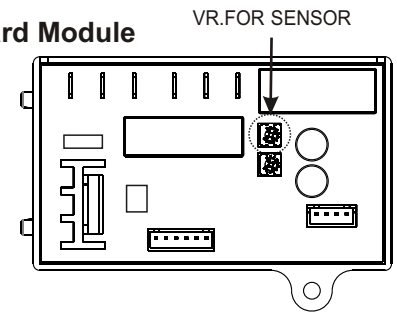

RESTROOMDIRECT WWW.RESTROOMDIRECT.COM 704•937•2673 129 Oakpark Dr., Unit A, Mooresville, NC 28115

AMERICAN SPECIALTIES INC.
441 Saw Mill River Road
Yonkers, NY 10701-4913
914.476.9000 | Fax 914.476.0688

20199

Diagnostics and Remedies

Symptom	Corrective Actions for Initial Installation Failures
If the dryer will not run	First ensure that the breaker supplying the dryer is operational. If it is, disconnect the power and remove the dryer cover. Taking suitable precautions to avoid shock hazard, reconnect the power and check for Voltage at the terminal block. Verify that connections are made correctly.
The dryer cycles by itself or runs constantly	Ensure that there is no obstruction on or in front of the IR sensor. Clean any dirt or debris off the sensor lens. If problem persists, replace sensor and CBM.
The dryer makes a loud noise and does not run for a complete cycle	Ensure that the supply Voltage is correct. Dryer will make a loud humming noise if the input Voltage is too high. Verify Voltage requirement on unit rating label and correct supply as required. If CBM has been damaged, replace CBM, IR sensor module and cable.
The dryer runs but air stream is low pressure and/or low velocity	Ensure that the supply Voltage is correct. Dryer will run weakly if the input Voltage is too low. Verify Voltage requirement on unit rating label and correct supply as required.

Symptom	Corrective Actions for In-Service Failures
If the dryer will not run	First ensure that the breaker supplying the dryer is operational. If it is, disconnect the power and remove the dryer cover. Replace the CBM and IR sensor module. Taking suitable precautions to avoid shock hazard, reconnect the power and check for Voltage at the terminal block.
	For 208~240 V: Disconnect power from unit; disconnect heater element from circuit; check resistance (Ω) of element with multimeter. If Ω is off-scale infinitely large then replace element. If Ω is between 25 and 30 then check motor brushes for wear and replace them if remaining graphite is ⩽ 25/64" [10]. If after reassembly and testing there is still no motor function then replace motor.
The IR sensor only “sees” close range objects	Ensure that there is no obstruction on or in front of the IR sensor. Clean any dirt or debris off the sensor lens. If problem persists, disconnect the power and remove the dryer cover. Taking suitable precautions to avoid shock hazard, reconnect the power and try carefully adjusting the sensitivity control (yellow shaft in blue box on CBM) to increase the sensing range. If problem persists, replace sensor and CBM.
The heater gets hot but no air stream is produced	Disconnect the power. Remove the dryer cover and disassemble the blower-motor/fan housing. Replace the fan motor.
The dryer only blows cold air during a full cycle	Disconnect the power. Remove the dryer cover and disassemble the blower-motor/fan housing. Test the thermostat for open circuit. Check the heater assembly for signs of burning or breakage. Damaged element must be replaced.
The air stream is low pressure and velocity	Check the output nozzle for obstructions. If none are present, disconnect the power. Remove the dryer cover. Remove any dust/lint buildup from intake vent slots. Disassemble the blower-motor/fan housing. Check the motor brushes for worn condition (⩽ 25/64" [10] graphite remains) and replace them, if necessary.

RESTROOMDIRECT WWW.RESTROOMDIRECT.COM 704•937•2673 129 Oakpark Dr., Unit A, Mooresville, NC 28115

AMERICAN SPECIALTIES INC.
441 Saw Mill River Road
Yonkers, NY 10701-4913
914.476.9000 | Fax 914.476.0688

20199

Repair parts list

Key	Part #	Description	Qty
1	A0166	Blower housing - Upper	1
2	A0168	Motor rubber - Upper	1
3		Motor	1
	A0170	0.67HP@120Vac	
	A0504	0.67HP@120Vac (240Vac)	
4	A0169	Motor rubber - Lower	1
5	A0167	Blower housing - Lower	1
6	A0172	Blower mounting bracket	1
7	A0184	Cover, Stainless steel - Satin	1
8	A0099	Security hex cap head 1/4"-20	2
		x5/8" screw with lock washer	
9	A0068	CAUTION label	1
10	A0185	Dry hand chamber	1
11	A0177	Sensor bracket	1
12		Sensor module	1
		110-120Vac (part of CBM)	
	A0259	208-240Vac	
13		Circuit Board Module (CBM)	1
	A0178	110-120Vac	
	A0430	220-240Vac	
14	A0186	Recessed box	1
15	A0180	Base plate	1
16		Heater assembly	1
	A0181	500W@120Vac,28.8Ω	
	A0249	500W@120Vac,28.8Ω (240Vac)	
17	A0133	Mylar shield with LNG marked	1
18	A0010	Terminal block	1
19		Caution Branch Circuit label	1
	A0267	15A - 110-120Vac	
	A0268	8A - 208-240Vac	
20	A0183	Nylon cable clamp	1
21	A0011	Grounding screw with cup	1
22	A0187	Rating label	1
23	-	Screw M5x50,philips pan head	1
24	-	Self threading screw M4x10,	6
		philips pan head	
25	-	Screw M4x18,philips pan head	1
26	-	Screw M5x8,philips pan head	4
		with external tooth lock washer	
27	-	Screw M5x10,philips pan head	3
28	-	Screw M3x8,philips pan head	2
29	-	Screw M4x5,philips pan head	1
		with external tooth lock washer	
30	-	Screw M4x10,philips pan head	5
		with external tooth lock washer	
31	-	Screw M3x16,philips pan head	2
32	-	Screw M6x8,philips pan head	4
		with external tooth lock washer	
33		Timer terminal legend	1
	A0503	110-120Vac	
	A0191	208-240Vac	
34		Label, Circuit Diagram	1
	A0332	110-120Vac	
	A0502	208-240Vac	
35		Wires Harness (Not Shown)	1
36	A0246	Motor Brushes, Set	1

RESTROOMDIRECT WWW.RESTROOMDIRECT.COM 704•937•2673 129 Oakpark Dr., Unit A, Mooresville, NC 28115

AMERICAN SPECIALTIES INC.
441 Saw Mill River Road
Yonkers, NY 10701-4913
914.476.9000 | Fax 914.476.0688

20199

Assembly Diagram

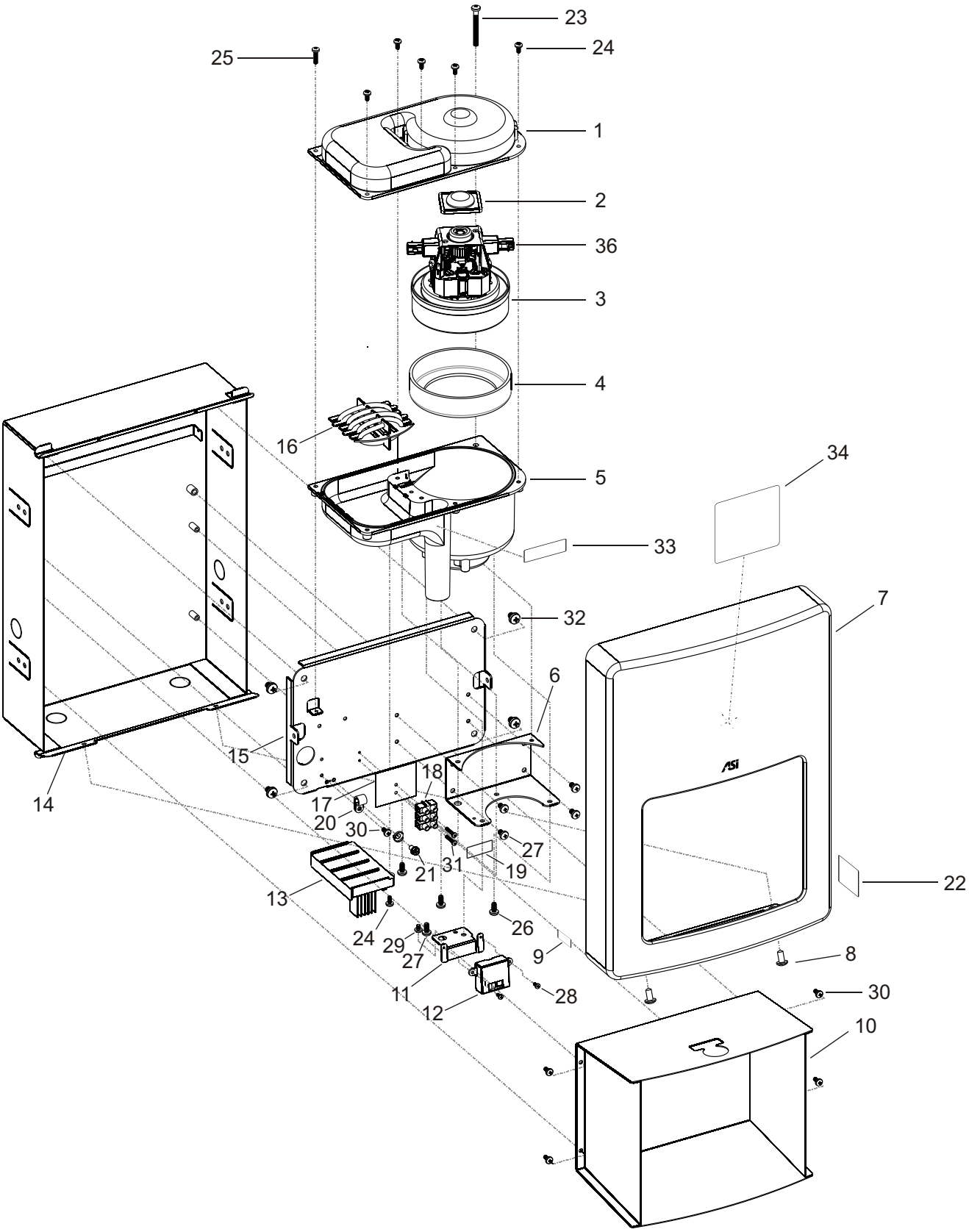

Patent Pending

RESTROOMDIRECT WWW.RESTROOMDIRECT.COM 704•937•2673 129 Oakpark Dr., Unit A, Mooresville, NC 28115